Apollo Case Study: GNC Sensors and Guidance Computer

Richard S. Stansbury
CEC 300: Computing in Aviation and Aerospace

EMBRY-RIDDLE Aeronautical University

Flight computing hardware

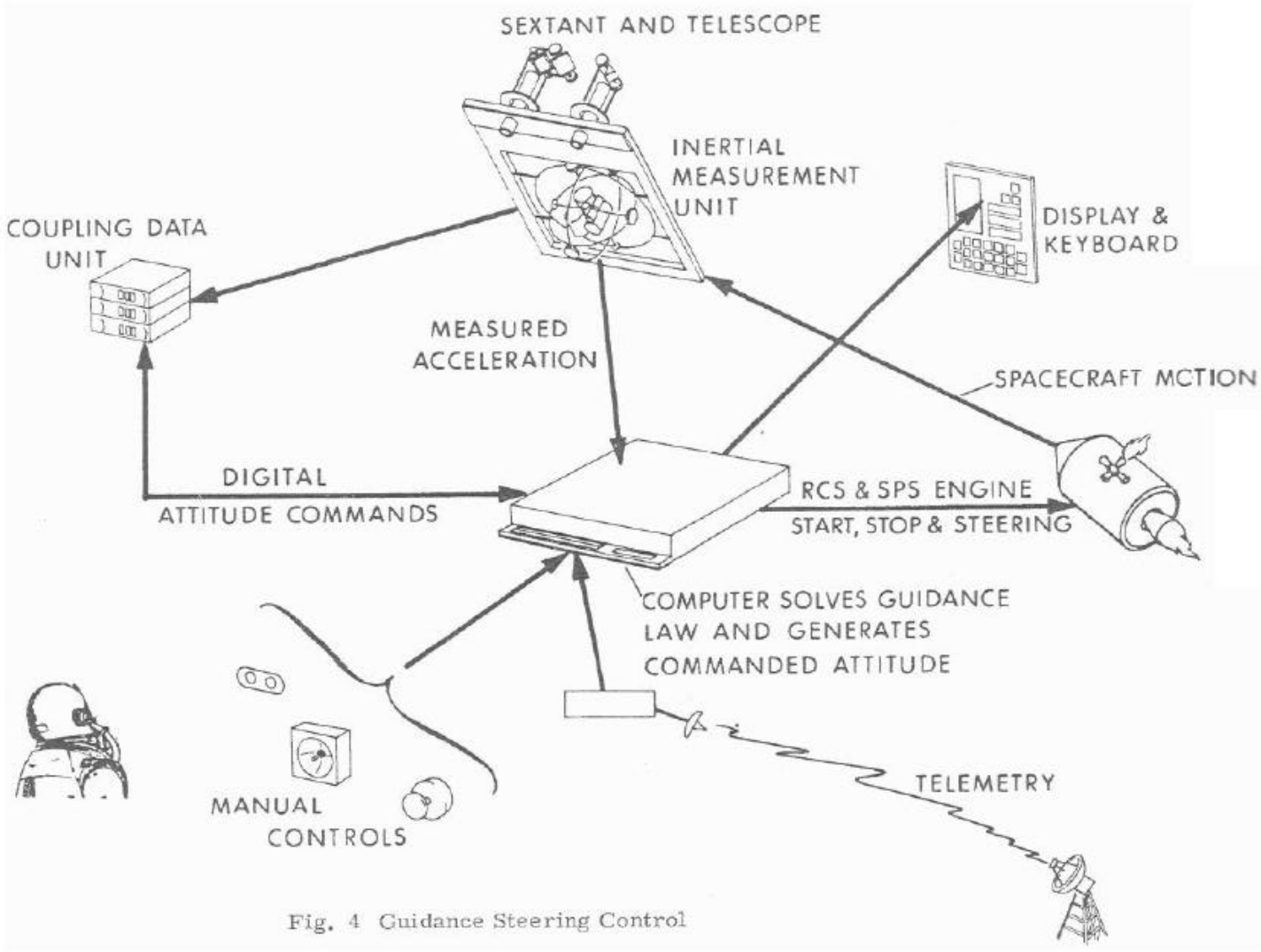

Fig. 4 Guidance Steering Control

EMBRY-RIDDLE Aeronautical University

The Control Requirement: Guidance vs. Navigation

NAVIGATION (Orbital Mechanics)

Determination of position and velocity in free-fall.

Inputs: Optical sightings, Drag-free calculations.

THE CONSTRAINT: System must provide autonomous capability for both Command Module and Lunar Module without ground telemetry.

GUIDANCE (Powered Flight)

Active steering and acceleration control during maneuvers.

Critical Phase: Lunar Descent & Trans-Earth Injection.

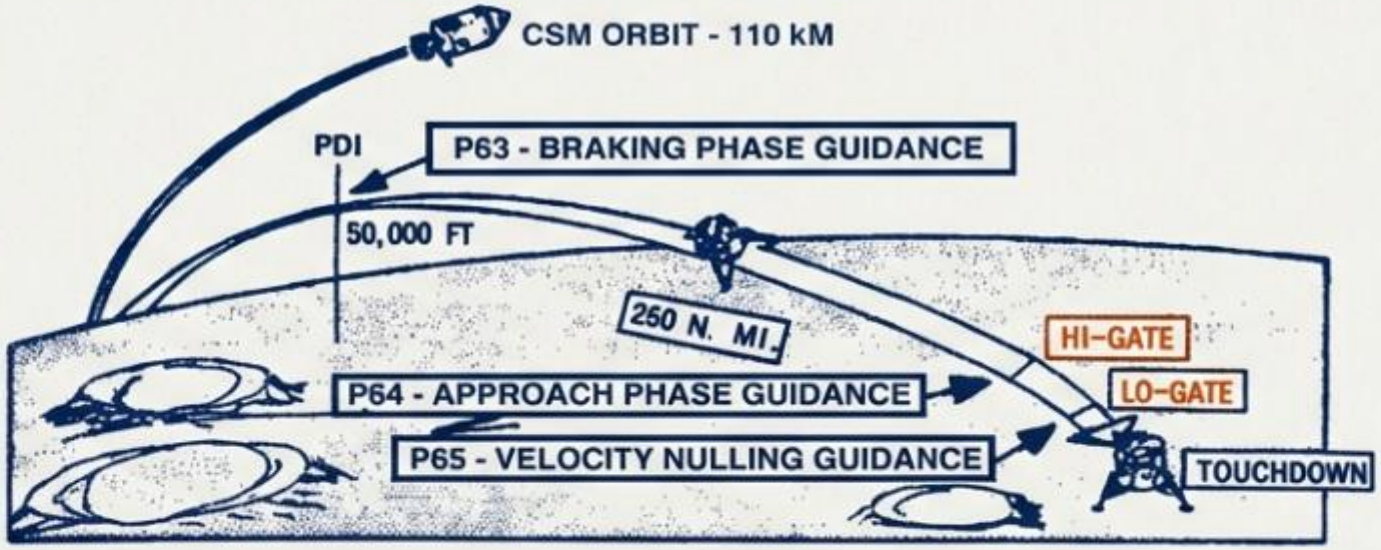

Fig. 3. Operational phases of powered descent. Design criteria: P 63 - Braking phase (PDI to Hi-Gate), efficient reduction of orbital velocity. P 64 - Final approach phase (Hi-Gate to Lo-Gate), crew visibility (safety and site assessment). P 65 - Landing phase (Lo-Gate to touchdown), manual control takeover.

→ How to land on the Moon, in general. The lack of atmosphere means airfoils or parachutes are off the table—the only way down is to ride a rocket. This is why the landing procedure in Apollo was called "powered descent."

NotebookLM

Command Module Block Diagram

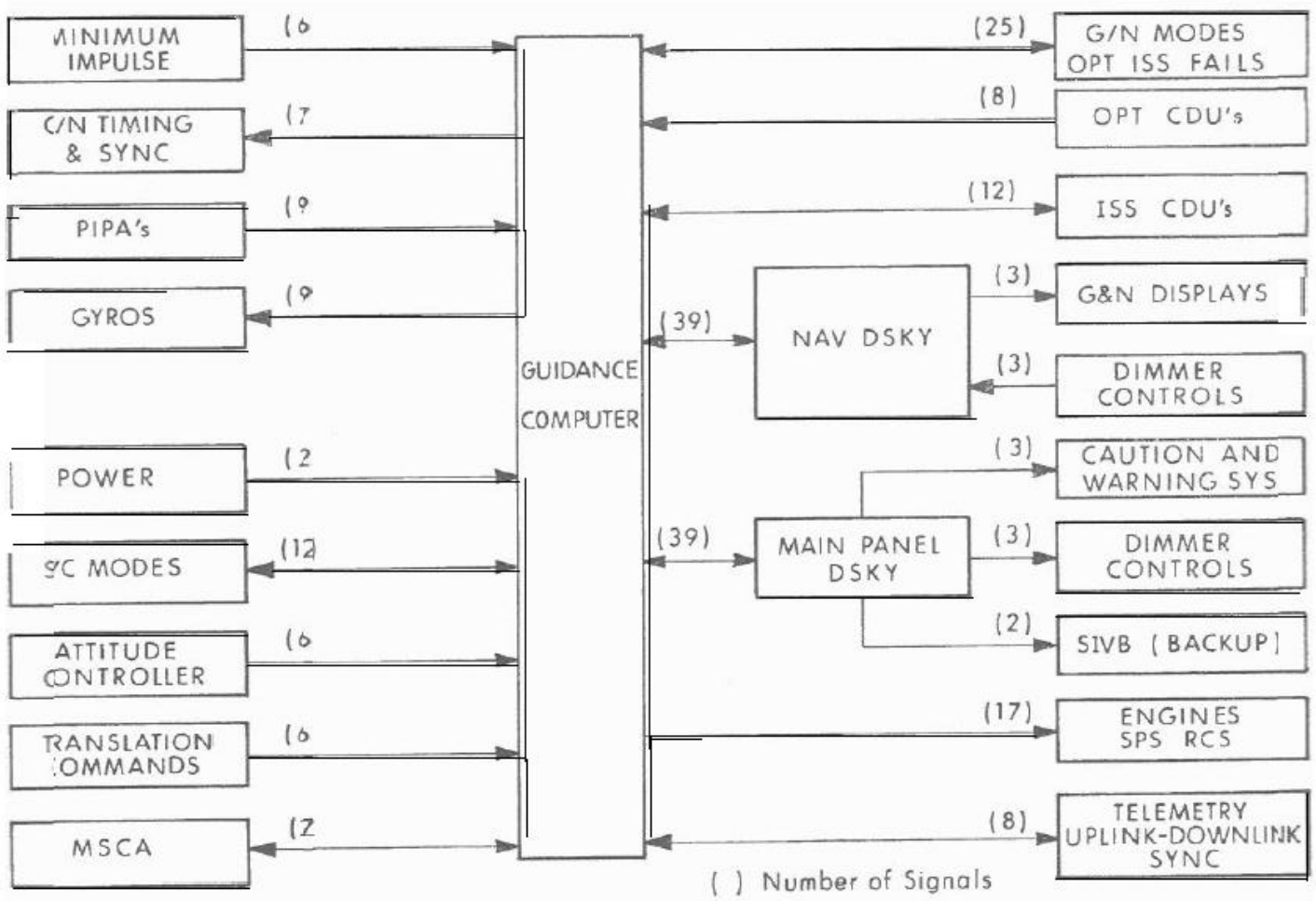

Fig. 5 Guidance, Navigation & Control interconnections in Command Module

EMBRY-RIDDLE Aeronautical University

Lunar Module

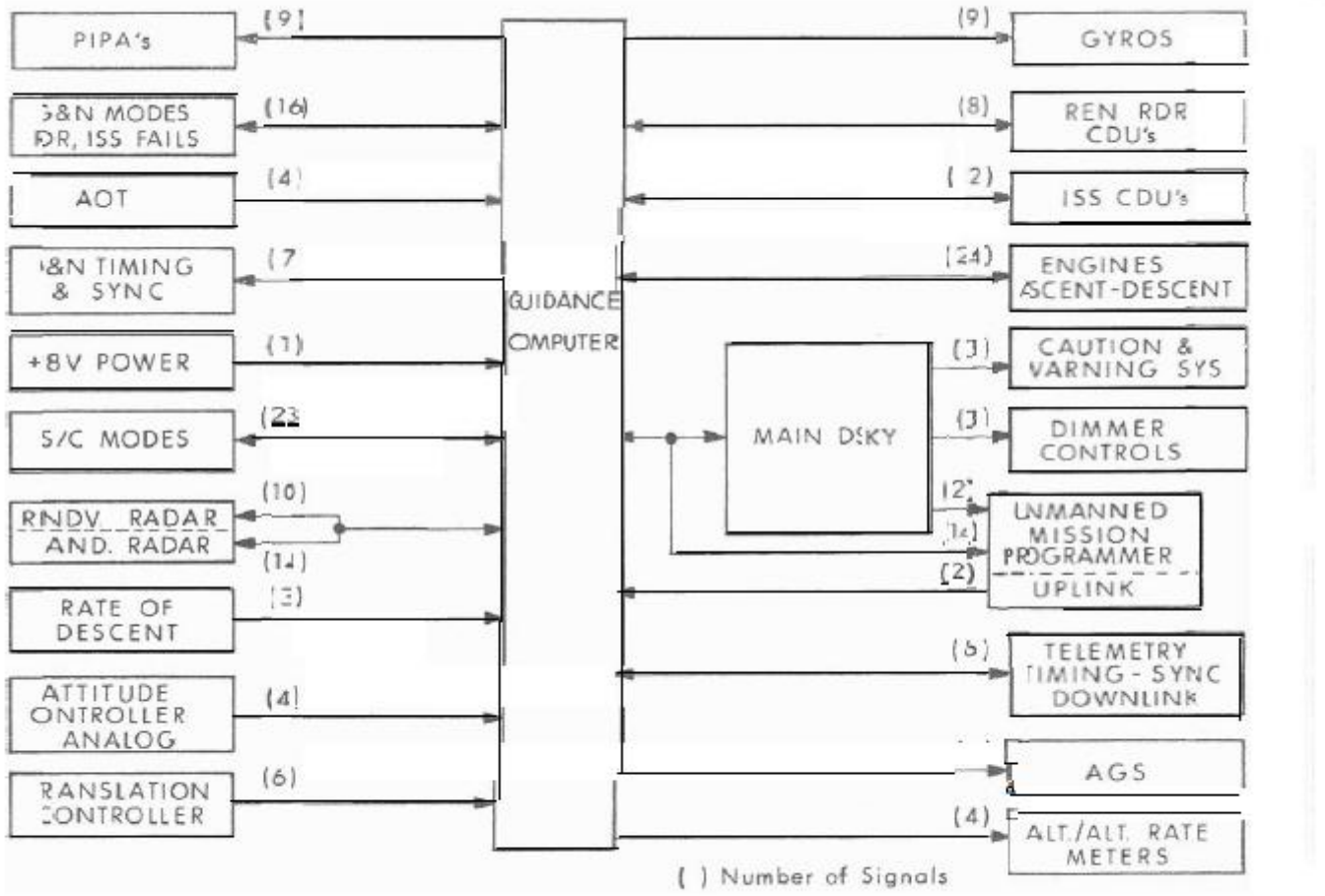

Fig. 8 Guidance, Navigation & Control Interconnections in LEM

Computational Building Block: NOR Gate

A	B	Q
0	0	1
0	1	0
1	0	0
1	1	0

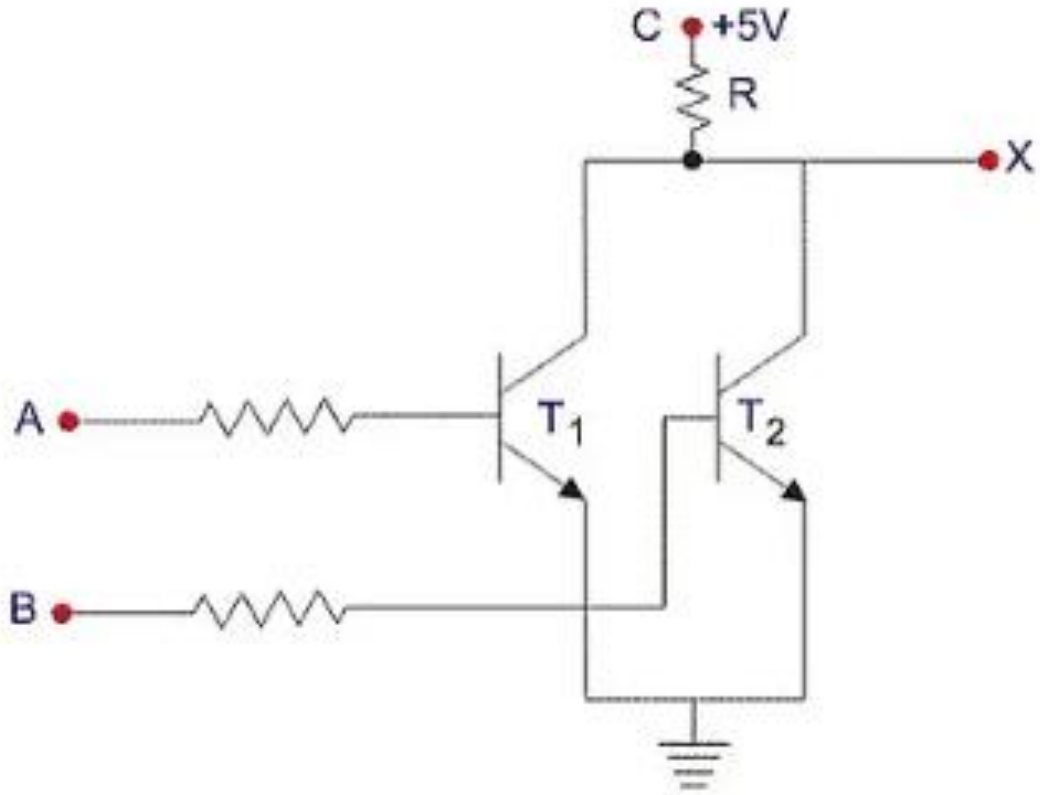

Building Logical Circuits using NOR Gates

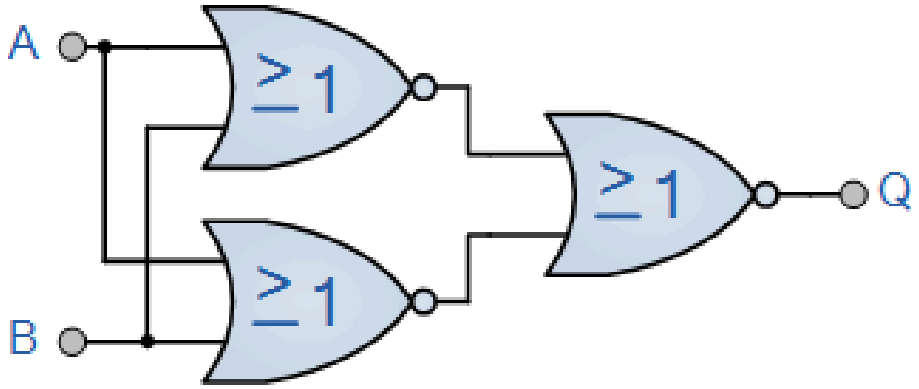

2-input OR Gate

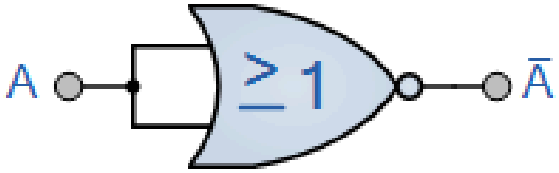

NOT Gate

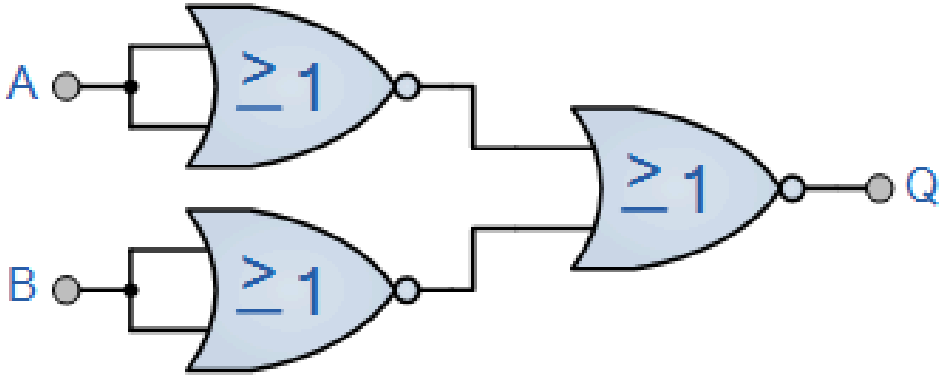

2-input AND Gate

EMBRY-RIDDLE
Aeronautical University

Environmental specifications

Condition	Requirement	Constraint/Target
Vibration	Launch: 7.8 g rms (random)	Constraint: No interconnect failure allowed.
Thermal	Operational: 0° to 40°C (Coldplate)	Storage: Up to 71°C.
Vacuum	Requirement: Hermetic Sealing	Constraint: No material outgassing.
Reliability	Target: MTBF > Mission Duration	Allowable Failure Rate: < 0.030 per million hours.

DESIGN DRIVER: No maintenance possible in flight.

Memory Architecture: Core Rope vs. Erasable

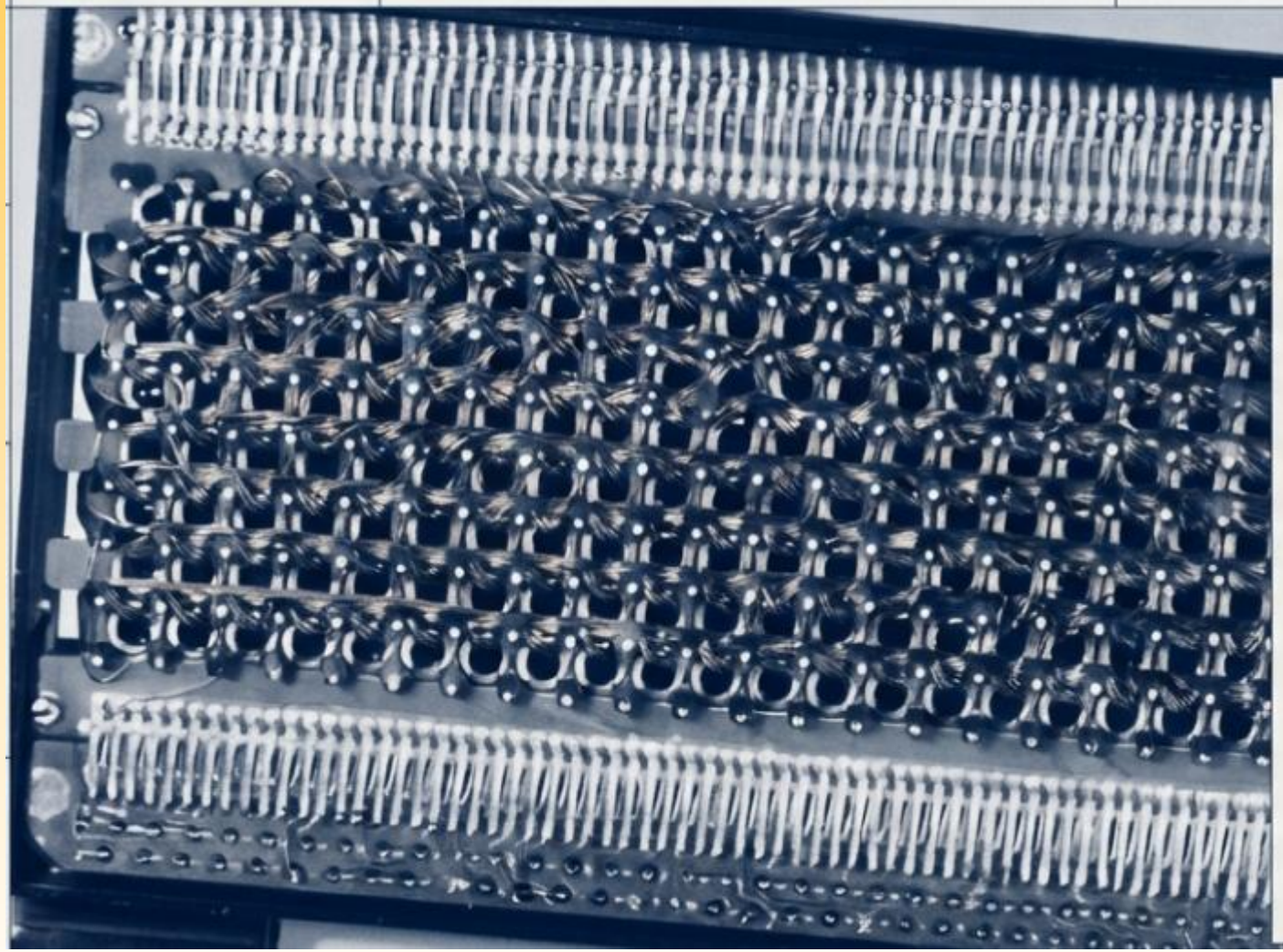

Word Length: 15 bits + 1 parity bit.

Erasable Memory (RAM): Magnetic Core.
- Capacity: 2K words.
- Function: State vectors, variables, scratchpad.

Fixed Memory (ROM): Core Rope.
- Capacity: 36K words.
- Function: Software is physically woven into hardware.

CONSTRAINT: Code is unchangeable in flight. Bugs cannot be patched.

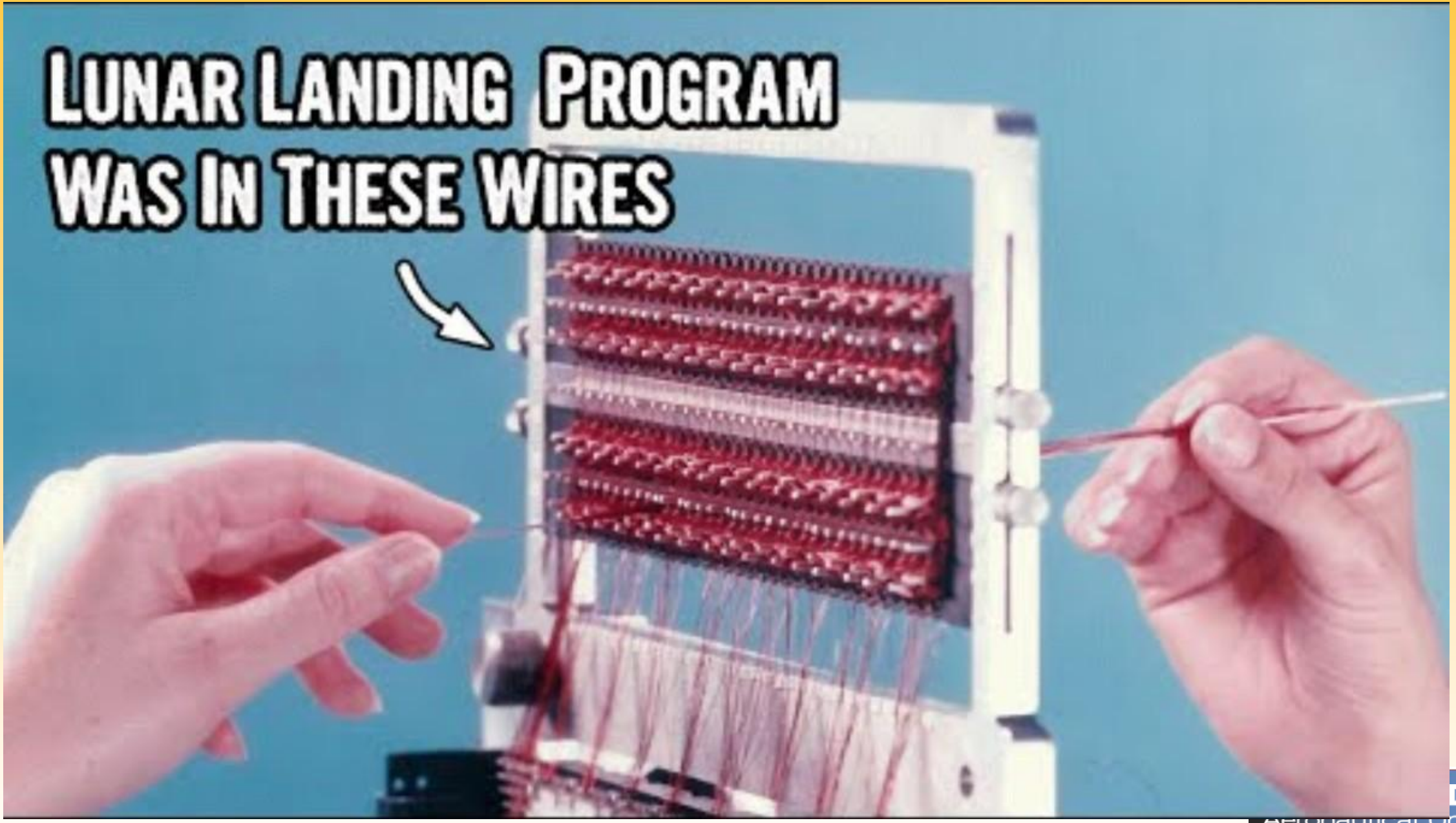
LUNAR LANDING PROGRAM
WAS IN THESE WIRES

Building the Computer (From the Vault of MIT: Computer for Apollo)

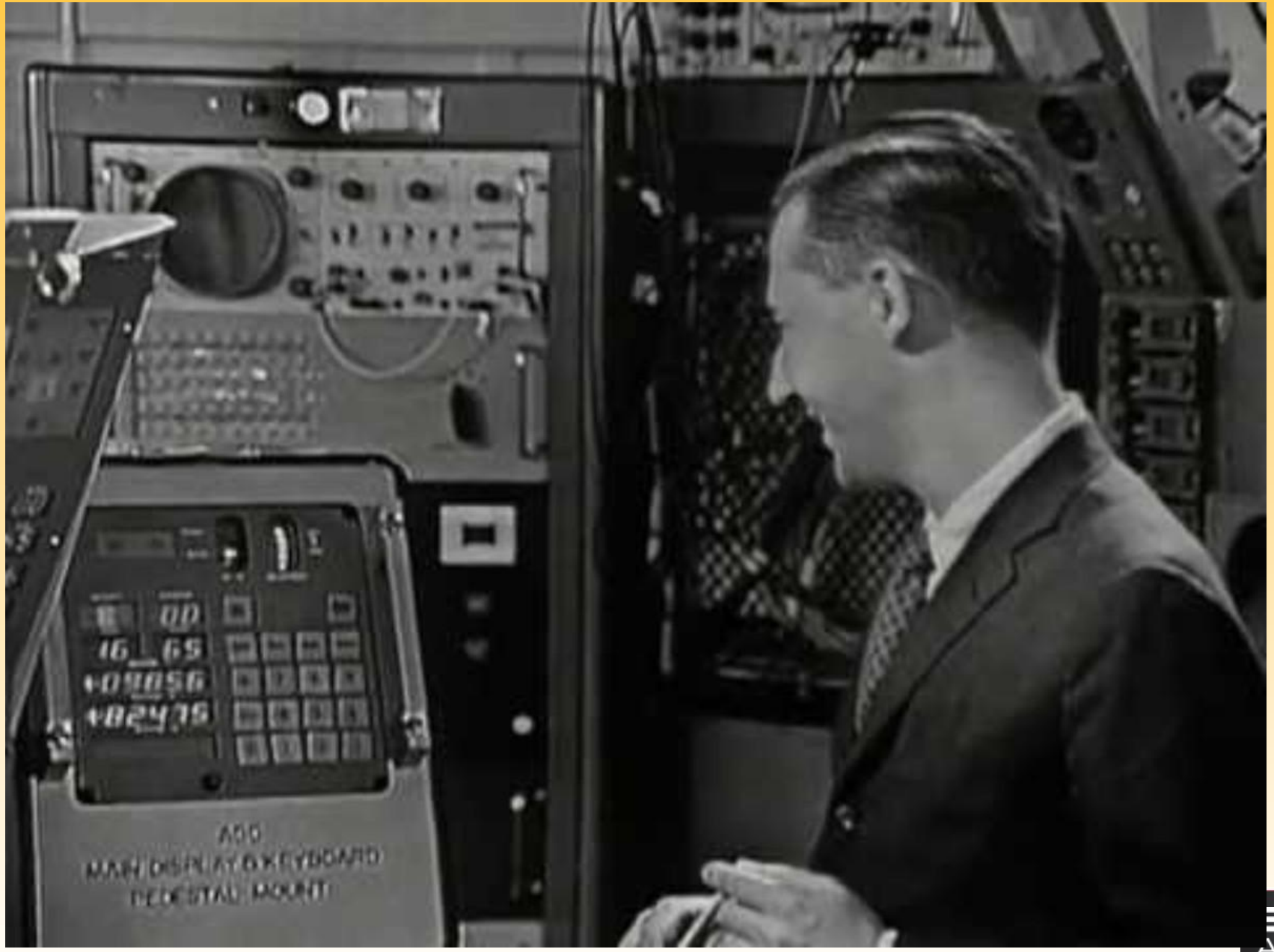

EMBRY-RIDDLE
Aeronautical University

Computer construction

- Method: Welding & Wire-Wrapping
  - Gas-Tight
  - Vibration resistance (no soldering)

- Wire-Wrapping
  - ~1km of wire
  - Gardner-Dever Automatic Wrapping Machine

- Screening
  - Examine component reliability based on sampling of lots of components.
  - Corrosion: 1 failure due to corrosion, discard.
  - Typical: 100 failures

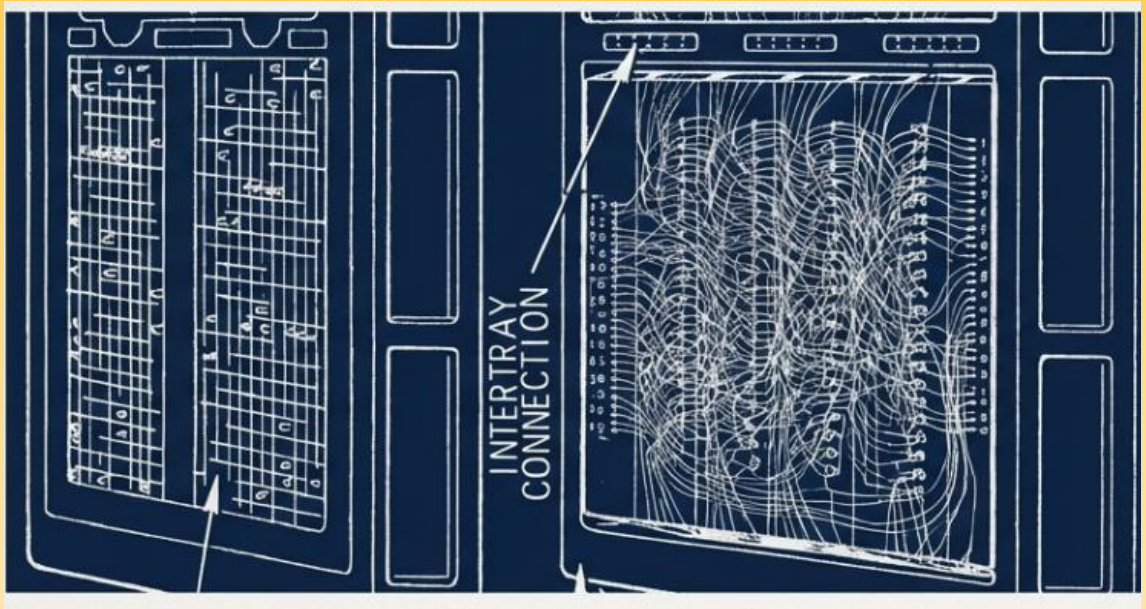

Why NOR vs. NAND?

- Maturity and reliability
  - Current hardware packaging does not permit repair.
  - Software in core rope immutable.
  - Avoids unexpected interaction between component types
  - Better test coverage
- NOR is the first “Universal Gate.”
  - Universal gates like NAND and NOR can be used to build complex logic circuits.
- NAND is also a Universal Gate AND his better performance.
- So why not NAND? Too early!
  - 1961-62 DTL NOR reached a sufficient level of maturity and reliability
  - 1963 AGC Design Freeze
  - Late 1960s, TTL NAND maturing and becoming dominant of the two in industry
  - 1970s, CMOS NAND Gates become dominant

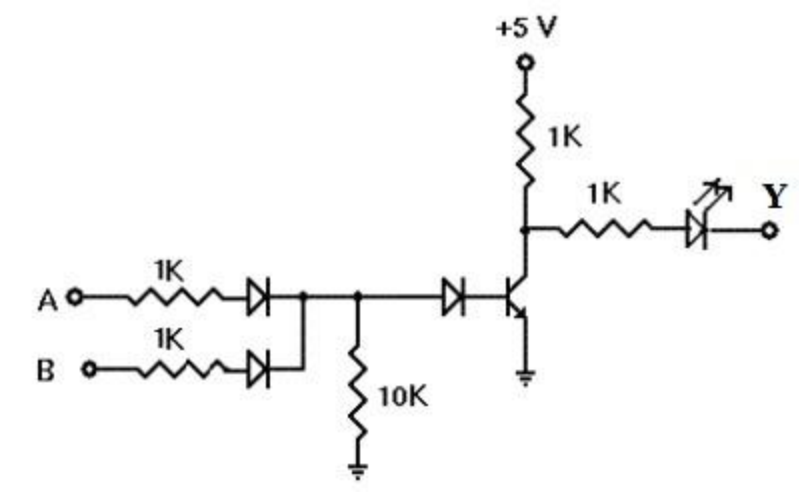

Why change from can-style NOR to flat pack?

- Issues with can
  - Bulky and tall
  - Heavy (metal can)
  - Longer leads are more susceptible to vibration stress
  - Greater risk of inductance

- Benefits of Flat Pack
  - Less weight and volume
  - Improved power and thermal limits

Modules

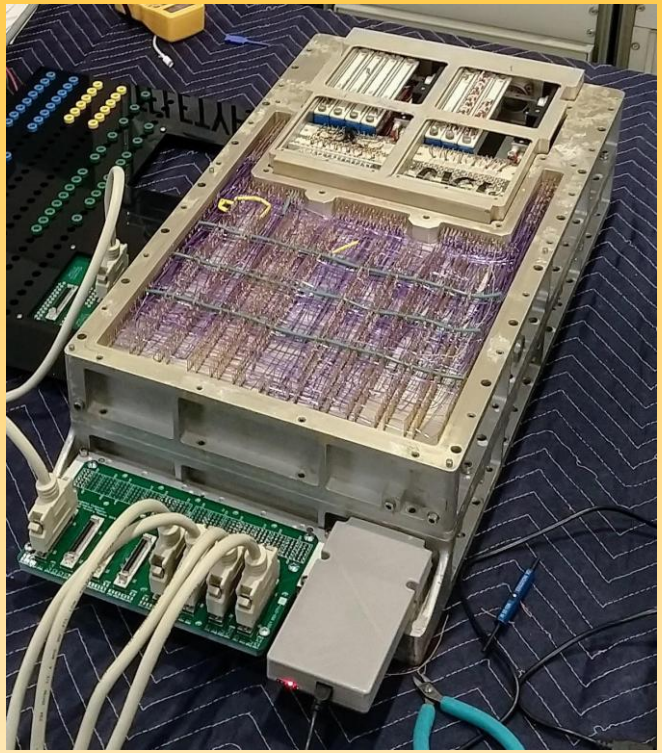

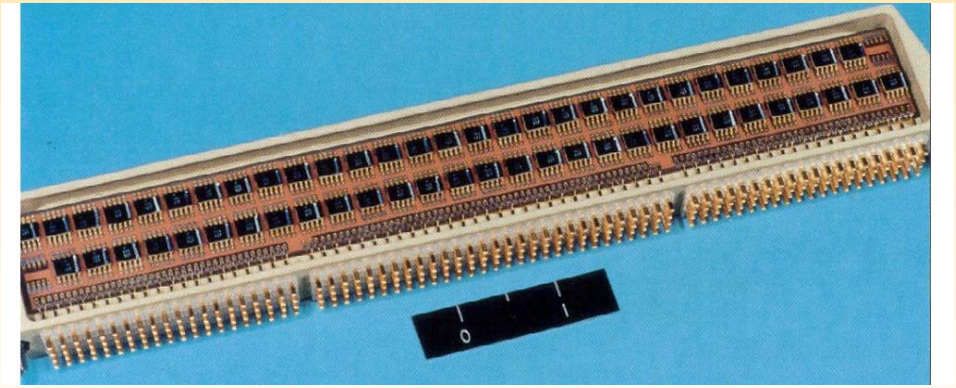

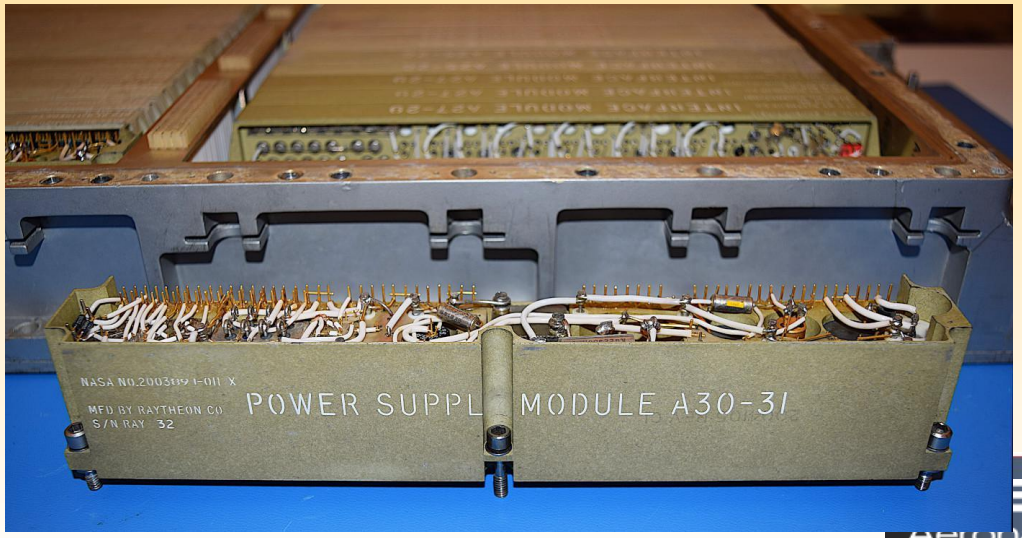

BRY-RIDDLE
Aeronautical University

Issue: Filament Flaking

- Small flakes of filment found in the circuits
- Resulted in intermittent failure
- Determined not to be component caused
- Cause of flaking was result of handling
- Solution:
  - Carefully clean and inspect assembly to remove any flakes from the hardware.

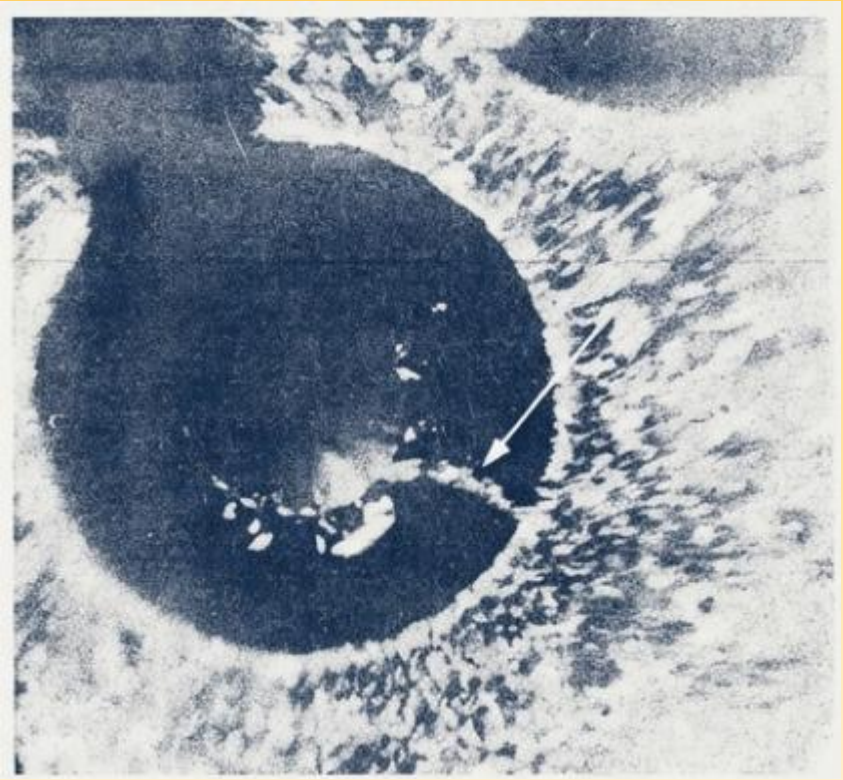

Why sealed?

- Mercury Mission – Gordon Cooper
  - During 19th orbit, automatic control system failed
  - Cooper flew three remaining orbits manually
- Cause:
  - Corrosion caused by humidity and human caused contamination in cabin
- Resolution:
  - Strict quality control, i.e. one failure due to corrosion will result in entire lot discarded
  - Hardware must be sealed for moisture
- Consequence: no repairs possible due to seals.
- Therefore, Failure is not an option.

The Executive: Jobs, Tasks, and Time-Slicing

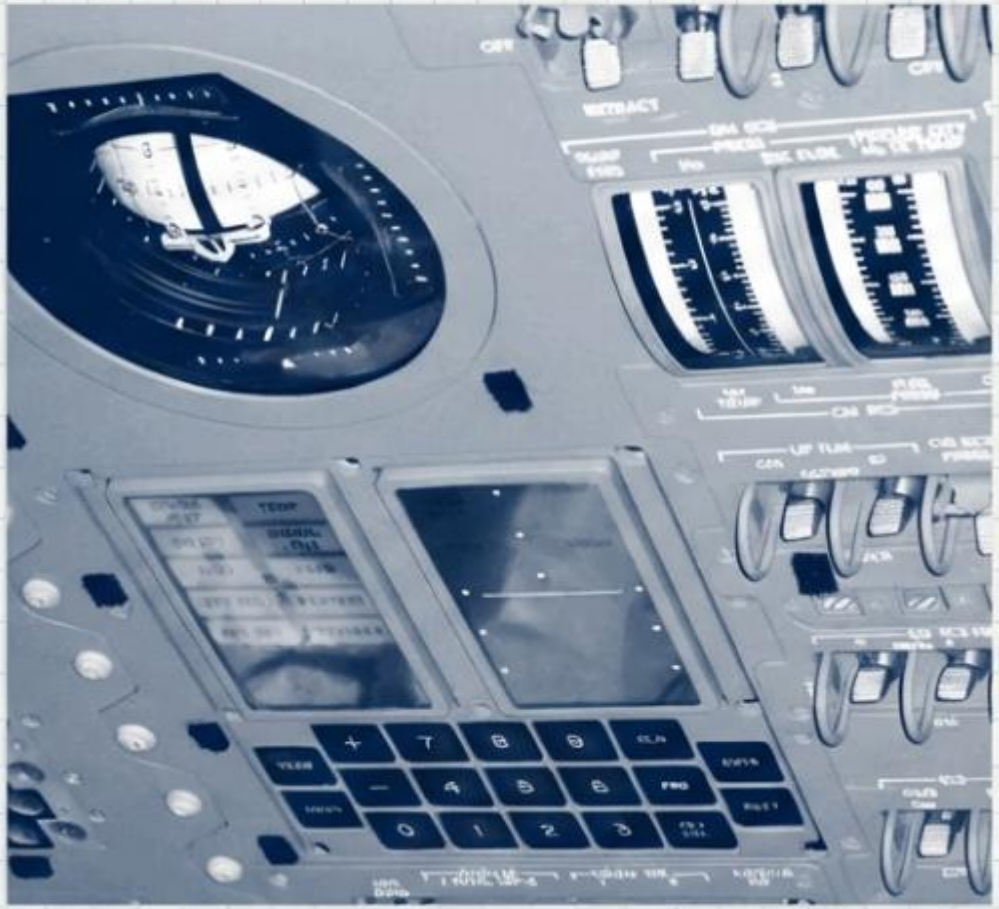

DSKY Interface in CM Panel. Photo: NASA.

Real-Time Operating System Structure

1. **JOBS** (Priority Execution)
   - Long-running applications (e.g., P63 Landing Guidance).
   - Scheduled by priority. Lower priority yields to higher.
2. **WAITLIST TASKS** (Interrupt Driven)
   - High-frequency, short-duration operations.
   - Executed every 0.25 seconds via hardware interrupts.
3. **THE SERVICER**
   - Background routine updating navigation and status flags.

The "Virtual Machine": The Interpreter

Native Machine Code

- Speed: Fast (80,000 instructions/sec)
- Size: Verbose
- Use: System basics

The Interpreter acts as a software CPU, sacrificing speed for code density to fit orbital mechanics into 36K memory.

Interpreter Code

- Speed: Slow (Software emulation)
- Size: Dense (Vector math in single words)
- Use: Guidance Equations
- Concept: Stack-based Polish Notation

Mars Computer

DSKY

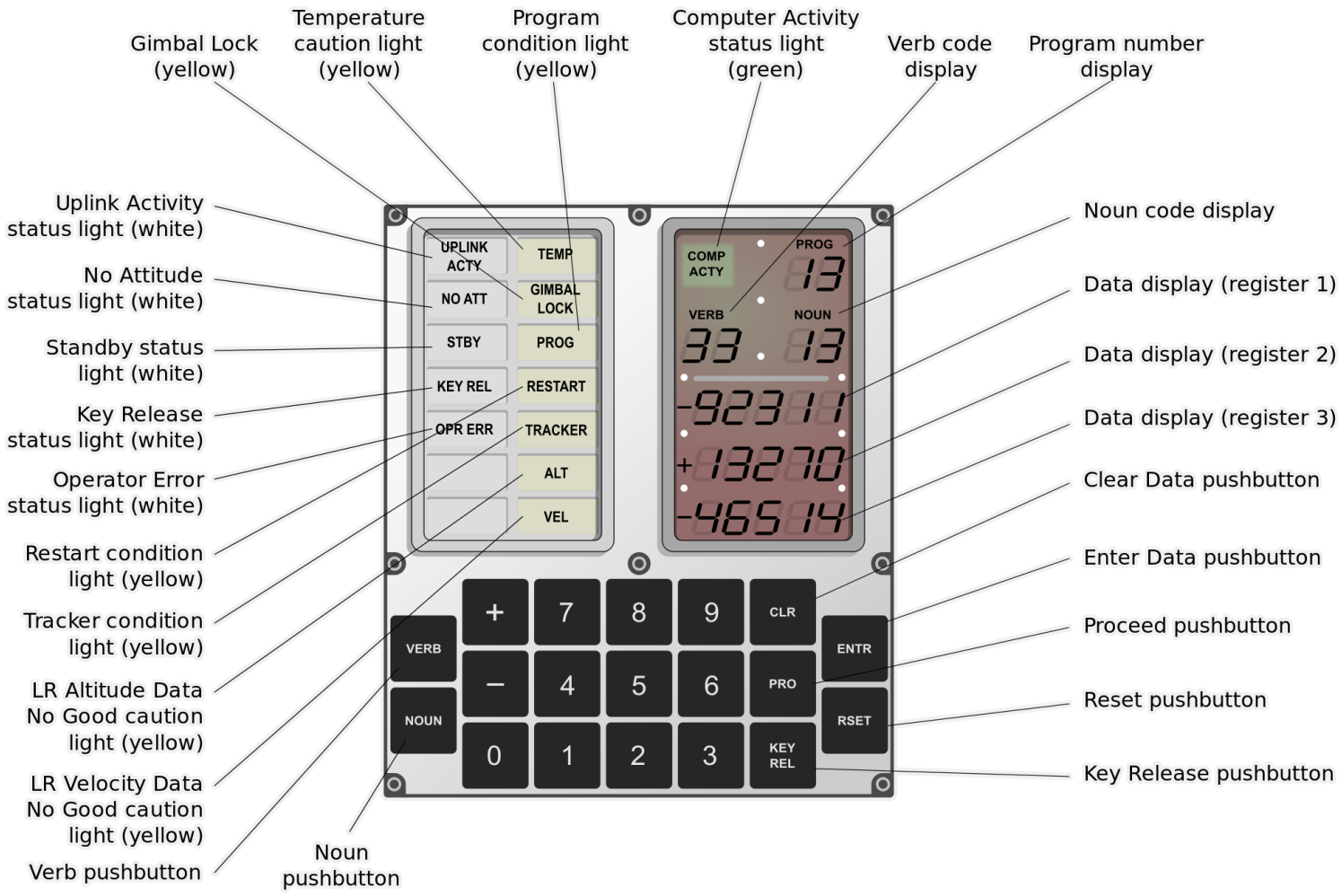

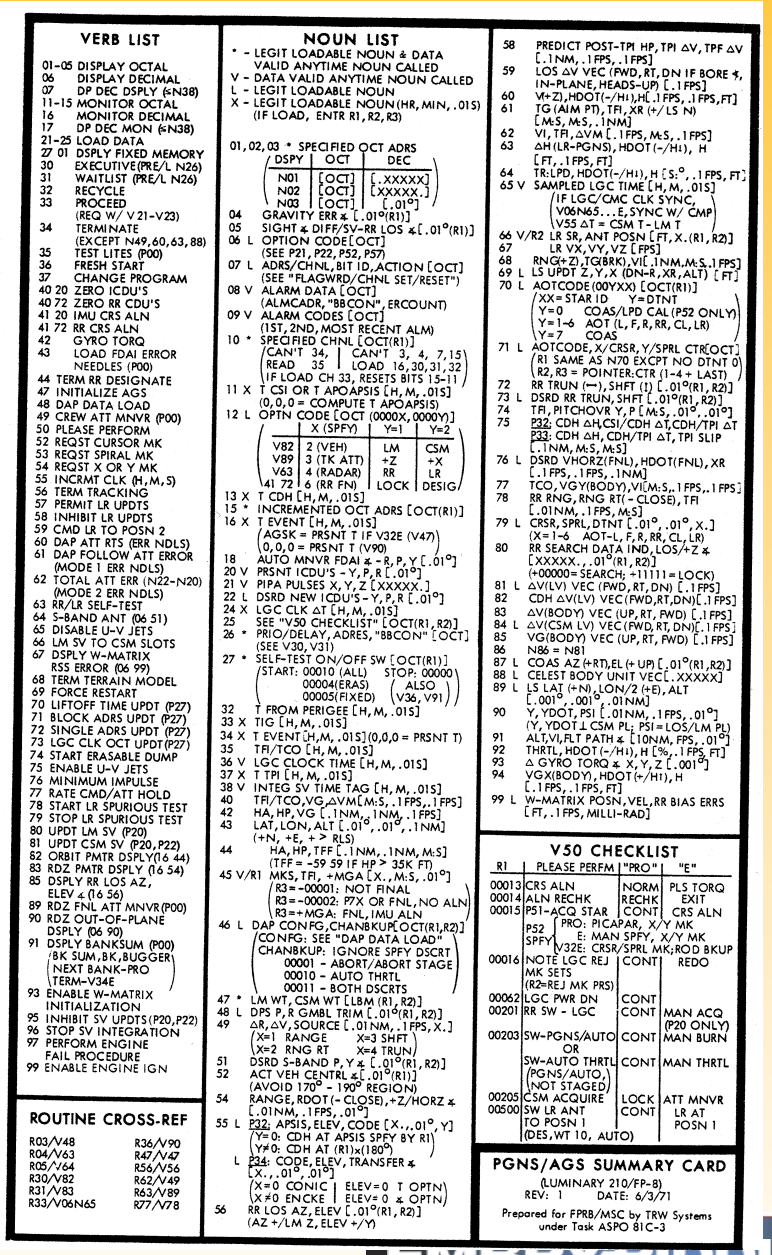

VERB LIST

01-05 DISPLAY OCTAL
06 DISPLAY DECIMAL
07 DP DEC DSPLY (≤N38)
11-15 MONITOR OCTAL
16 MONITOR DECIMAL
17 DP DEC MON (≤N38)
21-25 LOAD DATA
27 01 DSPLY FIXED MEMORY
30 EXECUTIVE(PRE/L N26)
31 WAITLIST (PRE/L N26)
32 RECYCLE
33 PROCEED (REQ W/ V 21-V23)
34 TERMINATE (EXCEPT N49,60,63,88)
35 TEST LITES (P00)
36 FRESH START
37 CHANGE PROGRAM
40 20 ZERO ICDU'S
40 72 ZERO RR CDU'S
41 20 IMU CRS ALN
41 72 RR CRS ALN
42 GYRO TORQ
43 LOAD FDAI ERROR NEEDLES (P00)
44 TERM RR DESIGNATE
47 INITIALIZE AGS
48 DAP DATA LOAD
49 CREW ATT MNVR (P00)
50 PLEASE PERFORM
52 REQST CURSOR MK
53 REQST SPIRAL MK
54 REQST X OR Y MK
55 INCRMT CLK (H,M,S)
56 TERM TRACKING
57 PERMIT LR UPDTS
58 INHIBIT LR UPDTS
59 CMD LR TO POSN 2
60 DAP ATT RTS (ERR NDLS)
61 DAP FOLLOW ATT ERROR (MODE 1 ERR NDLS)
62 TOTAL ATT ERR (N22-N20) (MODE 2 ERR NDLS)
63 RR/LR SELF-TEST
64 S-BAND ANT (06 51)
65 DISABLE U-V JETS
66 LM SV TO CSM SLOTS
67 DSPLY W-MATRIX RSS ERROR (06 99)
68 TERM TERRAIN MODEL
69 FORCE RESTART
70 LIFTOFF TIME UPDT (P27)
71 BLOCK ADRS UPDT (P27)
72 SINGLE ADRS UPDT (P27)
73 LGC CLK OCT UPDT(P27)
74 START ERASABLE DUMP
75 ENABLE U-V JETS
76 MINIMUM IMPULSE
77 RATE CMD/ATT HOLD
78 START LR SPURIOUS TEST
79 STOP LR SPURIOUS TEST
80 UPDT LM SV (P20)
81 UPDT CSM SV (P20,P22)
82 ORBIT PMTR DSPLY(16 44)
83 RDZ PMTR DSPLY (16 54)
85 DSPLY RR LOS AZ, ELEV ∡(16 56)
89 RDZ FNL ATT MNVR(P00)
90 RDZ OUT-OF-PLANE DSPLY (06 90)
91 DSPLY BANKSUM (P00) (BK SUM,BK,BUGGER NEXT BANK-PRO TERM-V34E)
93 ENABLE W-MATRIX INITIALIZATION
95 INHIBIT SV UPDTS(P20,P22)
96 STOP SV INTEGRATION
97 PERFORM ENGINE FAIL PROCEDURE
99 ENABLE ENGINE IGN

ROUTINE CROSS-REF

R03/V48 R36/V90
R04/V63 R47/V47
R05/V64 R56/V56
R30/V82 R62/V49
R31/V83 R63/V89
R33/V06N65 R77/V78

NOUN LIST

* - LEGIT LOADABLE NOUN & DATA VALID ANYTIME NOUN CALLED
V - DATA VALID ANYTIME NOUN CALLED
L - LEGIT LOADABLE NOUN
X - LEGIT LOADABLE NOUN (HR, MIN, .01S) (IF LOAD, ENTR R1, R2, R3)

01,02,03 * SPECIFIED OCT ADRS

DSPY	OCT	
N01	[OCT]	[.XXXXX]
N02	[OCT]	[XXXXX.]
N03	[OCT]	[.01°]

04 GRAVITY ERR ∡ [.01°(R1)]
05 SIGHT ∡ DIFF/SV-RR LOS ∡[.01°(R1)]
06 L OPTION CODE[OCT] (SEE P21, P22, P52, P57)
07 L ADRS/CHNL,BIT ID,ACTION [OCT] (SEE "FLAGWRD/CHNL SET/RESET")
08 V ALARM DATA [OCT] (ALMCADR, "BBCON", ERCOUNT)
09 V ALARM CODES [OCT] (1ST, 2ND, MOST RECENT ALM)
10 * SPECIFIED CHNL [OCT(R1)] (CAN'T 34, READ 35 | CAN'T 3, 4, 7,15 LOAD 16,30,31,32 IF LOAD CH 33, RESETS BITS 15-11)
11 X T CSI OR T APOAPSIS [H, M, .01S] (0,0,0 = COMPUTE T APOAPSIS)
12 L OPTN CODE [OCT (0000X, 0000Y)]

	X (SPFY)	Y=1	Y=2
V82	2 (VEH)	LM	CSM
V89	3 (TK ATT)	+Z	+X
V63	4 (RADAR)	RR	LR
41 72	6 (RR FN)	LOCK	DESIG

13 X T CDH [H, M, .01S]
15 * INCREMENTED OCT ADRS [OCT(R1)]
16 X T EVENT [H, M, .01S] (AGSK = PRSNT T IF V32E (V47) 0,0,0 = PRSNT T (V90))
18 AUTO MNVR FDAI ∡ -R, P, Y [.01°]
20 V PRSNT ICDU'S - Y, P, R [.01°]
21 V PIPA PULSES X, Y, Z [XXXXX.]
22 L DSRD NEW ICDU'S - Y, P, R [.01°]
24 X LGC CLK ΔT [H, M, .01S]
25 SEE "V50 CHECKLIST" [OCT(R1, R2)]
26 * PRIO/DELAY, ADRES, "BBCON" [OCT] (SEE V30, V31)
27 * SELF-TEST ON/OFF SW [OCT(R1)] (START: 00010 (ALL) STOP: 00000; 00004(ERAS); 00005(FIXED) (ALSO V36, V91))
32 T FROM PERIGEE [H, M, .01S]
33 X TIG [H, M, .01S]
34 X T EVENT [H, M, .01S] (0,0,0 = PRSNT T)
35 TFI/TCO [H, M, .01S]
36 V LGC CLOCK TIME [H, M, .01S]
37 X T TPI [H, M, .01S]
38 V INTEG SV TIME TAG [H, M, .01S]
40 TFI/TCO, VG, ΔVM [M:S, .1FPS, .1FPS]
42 HA, HP, VG [.1NM, .1NM, .1FPS]
43 LAT, LON, ALT [.01°, .01°, .1NM] (+N, +E, + > RLS)
44 HA, HP, TFF [.1NM, .1NM, M:S] (TFF = -59 59 IF HP > 35K FT)
45 V/R1 MKS, TFI, +MGA [X., M:S, .01°] (R3 = -00001: NOT FINAL; R3 = -00002: P7X OR FNL, NO ALN; R3 = +MGA: FNL, IMU ALN)
46 L DAP CONFG, CHANBKUP [OCT(R1, R2)] (CONFG: SEE "DAP DATA LOAD"; CHANBKUP: IGNORE SPFY DSCRT; 00001 - ABORT/ABORT STAGE; 00010 - AUTO THRTL; 00011 - BOTH DSCRTS)
47 * LM WT, CSM WT [LBM (R1, R2)]
48 L DPS P, R GMBL TRIM [.01°(R1, R2)]
49 ΔR, ΔV, SOURCE [.01NM, .1FPS, X.] (X=1 RANGE X=3 SHFT; X=2 RNG RT X=4 TRUN)
51 DSRD S-BAND P, Y ∡ [.01°(R1, R2)]
52 ACT VEH CENTRL ∡ [.01°(R1)] (AVOID 170° - 190° REGION)
54 RANGE, RDOT (- CLOSE), +Z/HORZ ∡ [.01NM, .1FPS, .01°]
55 L P32: APSIS, ELEV, CODE [X., .01°, Y] (Y=0: CDH AT APSIS SPFY BY R1; Y≠0: CDH AT (R1)x(180°))
L P34: CODE, ELEV, TRANSFER ∡ [X., .01°, .01°] (X=0 CONIC | ELEV=0 T OPTN; X≠0 ENCKE | ELEV=0 ∡ OPTN)
56 RR LOS AZ, ELEV [.01°(R1, R2)] (AZ +/LM Z, ELEV +/Y)
58 PREDICT POST-TPI HP, TPI ΔV, TPF ΔV [.1NM, .1FPS, .1FPS]
59 LOS ΔV VEC (FWD, RT, DN IF BORE ∡, IN-PLANE, HEADS-UP) [.1FPS]
60 V(+Z), HDOT(-/H1), H[.1FPS, .1FPS, FT]
61 TG (AIM PT), TFI, XR (+/ LS N) [M:S, M:S, .1NM]
62 VI, TFI, ΔVM [.1FPS, M:S, .1FPS]
63 ΔH (LR-PGNS), HDOT (-/H1), H [FT, .1FPS, FT]
64 TR: LPD, HDOT(-/H1), H [S:°, .1FPS, FT]
65 V SAMPLED LGC TIME [H, M, .01S] (IF LGC/CMC CLK SYNC, V06N65...E, SYNC W/ CMP; V55 ΔT = CSM T - LM T)
66 V/R2 LR SR, ANT POSN [FT, X.(R1, R2)]
67 LR VX, VY, VZ [FPS]
68 RNG(+Z), TG(BRK), VI[.1NM, M:S, .1FPS]
69 L LS UPDT Z, Y, X (DN-R, XR, ALT) [FT]
70 L AOTCODE (00YXX) [OCT(R1)] (XX = STAR ID Y = DTNT; Y=0 COAS/LPD CAL (P52 ONLY); Y=1-6 AOT (L, F, R, RR, CL, LR); Y=7 COAS)
71 L AOTCODE, X/CRSR, Y/SPRL CTR[OCT] (R1 SAME AS N70 EXCPT NO DTNT 0; R2, R3 = POINTER: CTR (1-4 + LAST))
72 RR TRUN (→), SHFT (↑) [.01°(R1, R2)]
73 L DSRD RR TRUN, SHFT [.01°(R1, R2)]
74 TFI, PITCHOVR Y, P [M:S, .01°, .01°]
75 P32: CDH ΔH, CSI/CDH ΔT, CDH/TPI ΔT; P33: CDH ΔH, CDH/TPI ΔT, TPI SLIP [.1NM, M:S, M:S]
76 L DSRD VHORZ(FNL), HDOT(FNL), XR [.1FPS, .1FPS, .1NM]
77 TCO, VGY(BODY), VI[M:S, .1FPS, .1FPS]
78 RR RNG, RNG RT(- CLOSE), TFI [.01NM, .1FPS, M:S]
79 L CRSR, SPRL, DTNT [.01°, .01°, X.] (X=1-6 AOT-L, F, R, RR, CL, LR)
80 RR SEARCH DATA IND, LOS/+Z ∡ [XXXXX., .01°(R1, R2)] (+00000 = SEARCH; +11111 = LOCK)
81 L ΔV(LV) VEC (FWD, RT, DN) [.1FPS]
82 CDH ΔV(LV) VEC (FWD, RT, DN)[.1FPS]
83 ΔV(BODY) VEC (UP, RT, FWD) [.1FPS]
84 L ΔV(CSM LV) VEC (FWD, RT, DN)[.1FPS]
85 VG(BODY) VEC (UP, RT, FWD) [.1FPS]
86 N86 = N81
87 L COAS AZ (+RT), EL (+UP) [.01°(R1, R2)]
88 L CELEST BODY UNIT VEC[.XXXXX]
89 L LS LAT (+N), LON/2 (+E), ALT [.001°, .001°, .01NM]
90 Y, YDOT, PSI [.01NM, .1FPS, .01°] (Y, YDOT LCSM PL; PSI = LOS/LM PL)
91 ALT, VI, FLT PATH ∡ [10NM, FPS, .01°]
92 THRTL, HDOT(-/H1), H [%, .1FPS, FT]
93 Δ GYRO TORQ ∡ X, Y, Z [.001°]
94 VGX(BODY), HDOT(+/H1), H [.1FPS, .1FPS, FT]
99 L W-MATRIX POSN, VEL, RR BIAS ERRS [FT, .1FPS, MILLI-RAD]

V50 CHECKLIST

R1	PLEASE PERFM	"PRO"	"E"
00013	CRS ALN	NORM	PLS TORQ
00014	ALN RECHK	RECHK	EXIT
00015	P51-ACQ STAR	CONT	CRS ALN
	P52 SPFY (PRO: PICAPAR, X/Y MK; E: MAN SPFY, X/Y MK; V32E: CRSR/SPRL MK; RQD BKUP)		
00016	NOTE LGC REJ MK SETS (R2=REJ MK PRS)	CONT	REDO
00062	LGC PWR DN	CONT	
00201	RR SW - LGC	CONT	MAN ACQ (P20 ONLY)
00203	SW-PGNS/AUTO OR SW-AUTO THRTL (PGNS/AUTO, NOT STAGED)	CONT	MAN BURN; MAN THRTL
00205	CSM ACQUIRE	LOCK	ATT MNVR
00500	SW LR ANT TO POSN 1 (DES, WT 10, AUTO)	CONT	LR AT POSN 1

PGNS/AGS SUMMARY CARD

(LUMINARY 210/FP-8)
REV: 1 DATE: 6/3/71

Prepared for FPRB/MSC by TRW Systems under Task ASPO 81C-3

EMBRY-RIDDLE Aeronautical University

Onboard cheet sheet

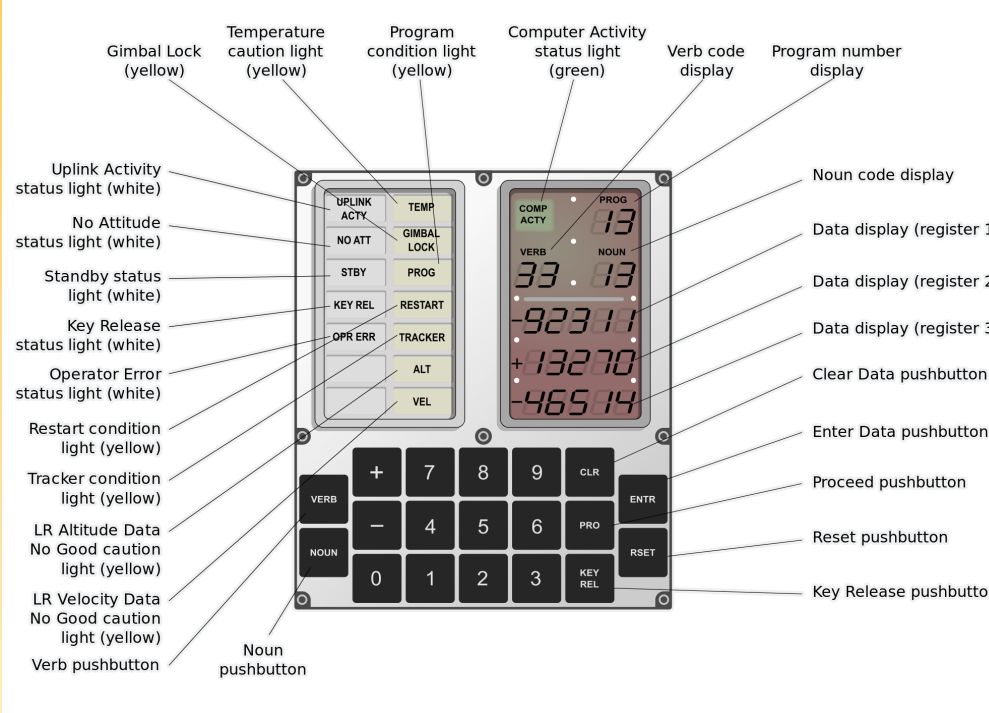

EMBRY-RIDDLE Aeronautical University

Resillence

Resilience Architecture:

1. **No Blue Screen of Death:** System is designed to fail gracefully.
2. **The Restart Strategy:** In an overload (1201/1202 Alarm), the Executive flushes the Job Queue.
3. **State Preservation:** Critical "State Vector" (Position/Velocity) is preserved in magnetic core RAM.
4. **Result:** Guidance equations resume immediately. Reboot takes milliseconds.

Apollo 14 Radar Failure

NASA-S.66-5044 JUN

LM THREE-PHASED POWERED DESCENT

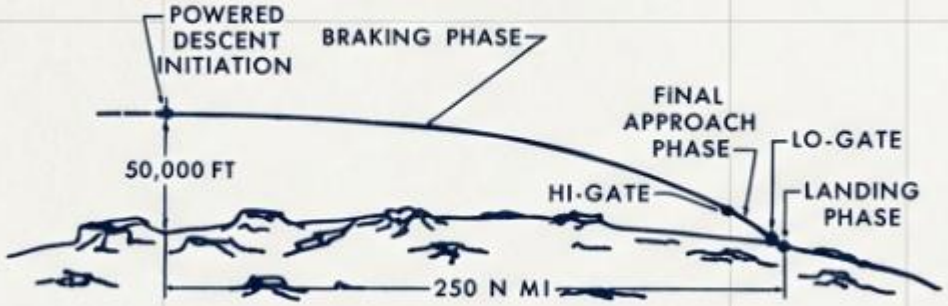

- BRAKING PHASE - ALLOWS EFFICIENT REDUCTION OF MOST OF VELOCITY
- FINAL APPROACH PHASE - ALLOWS ACQUISITION AND ASSESSMENT OF SITE AND CONFIRMATION OF FLIGHT SAFETY BY PILOT
- LANDING PHASE-ALLOWS VERNIER CONTROL OF POSITION AND VELOCITIES

FIGRE 15

24-24	LOSS OF LANDING RADAR	DOCKED/ UNOOCKEO	1. RETURN TO CSM ASAP 2. NO-GO FOR CIRC
		PRE-POI	1. RETURN TO CSM ASAP 2. NO-GO FOR POI
		POWERED DESCENT	1. PRION TO ADEQUATE ALTITUDE UPDATING OF LM STATE VECTORS--- (A) NO-GO FOR LANDING (B) ABORT 2. AFTER ADEQUATE ALTITUDE UPDATING OF LM STATE VECTORS--- CONTINUE MISSION

The Second Anomaly: Landing radar stuck in short-range mode at 30,000 ft.

Mission Rule: No Radar = Abort.

The Fix: Hardware cycling (Circuit breaker reset) + Manual altitude updates via DSKY.

Outcome: Radar lock re-acquired at ~22,000 ft, seconds before mandatory abort.

System Resilience: The AGC accepted the late data and converged the state vector immediately.

Apollo 14 Abort Error

The Hardware Failure:

- A loose ball of solder inside the panel switch floated between contacts.
- Result: Intermittent electrical short.

The Software Consequence:

- Computer reads 'Abort' bit as 1 (Active)
- If descent engine fires, Program P70 triggers automatic abort.
- Result: Mission failure; return to orbit; no landing.

Diagnosis: Visualizing the Invisible

```
VERB 11 ENTER
NOUN 10 ENTER
30 ENTER
```

Action:
Monitor Input Channel 30.

Observation:
Bit 1 (**Abort Status**) was **flickering**.

Diagnosis:
The computer believes an abort is being requested.

Physical Fix Attempt:
"**Percussive Maintenance**" (tapping the panel) worked temporarily, but the risk remained.

EMBRY-RIDDLE Aeronautical University

Resolving Abort Button Error

- **Step 1: Spoof the Mode (The Hack).**
  - **Action:** The crew must manually overwrite the **Major Mode Register** to display "71" (Program 71).
  - **Why:** Routine R11 checks the physical abort button. However, the logic dictates that if an abort is *already* in progress (P71), checking the button is unnecessary. By spoofing P71, R11 "terminate[s]" its check, effectively silencing the broken button,.
- **Step 2: Force the Throttle (The Consequence).**
  - **Action:** The crew must manually throttle up the engine and set the **ZOOMBIT** flag.
  - **Why:** Because the computer thinks it is in an abort (P71) rather than a landing (P63), it does not automatically throttle up the descent engine. The crew must manually advance the throttle, then set ZOOMBIT to tell the guidance equations to take over control.
- **Step 3: Cleanup (The Safety).**
  - **Action:** Reset the **LETABBIT** flag/register.
  - **Why:** Once the critical phase is over or the landing is secure, the system must be restored so that a legitimate abort can be triggered if necessary.

Spoofing the Radar

- The Issue: While over 10 miles from the landing site, the radar prematurely switched to short-range mode, becoming "nearsighted" and unable to lock onto the lunar surface.
- **Immediate Field Fix:** Following a suggestion from Mission Control, the crew pulled the radar’s circuit breaker and then powered the system back on.
- **Operational Result:** This "power cycle" reset the system, allowing solid radar data to begin flowing into the computer for a successful touchdown.
- **Mission Rule Contingency:** If the fix had failed, rules permitted a landing without radar if the primary (AGC) and backup (AGS) altitude readings had less than a 1,000-foot disagreement.
- **Permanent Post-Mission Fix:** To prevent noise-induced switching, range selection circuits were modified so the radar could only change modes when physically in the correct position.